SALES DRAWING SALES DRAWING SALES DRAWING

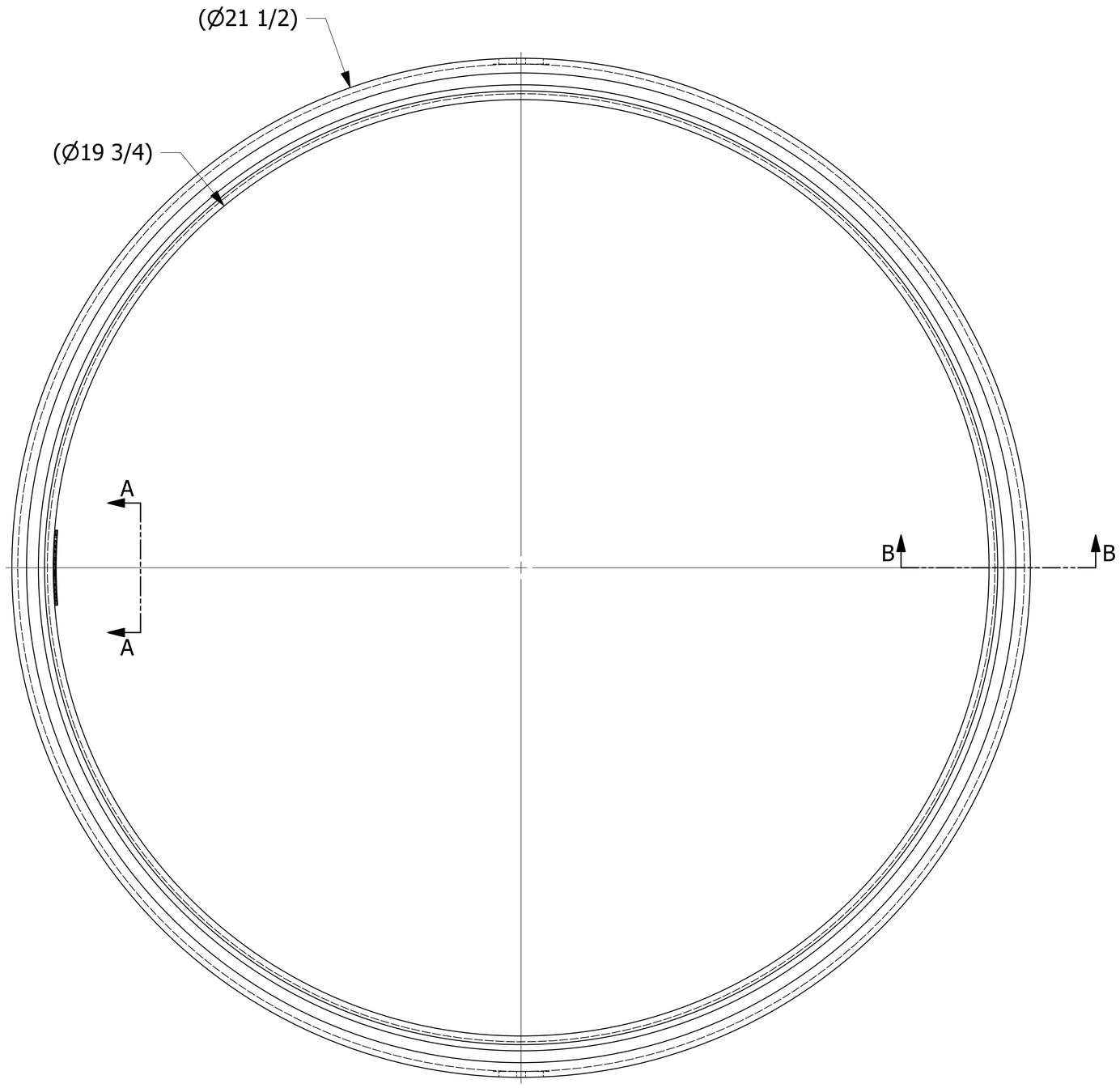

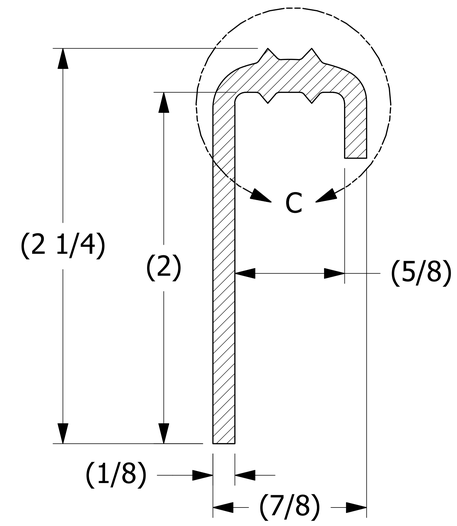

SECTION B-B
SCALE 3 : 1

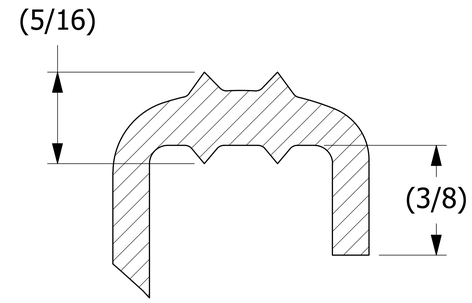

DETAIL C
SCALE 5 : 1

SALCO PRODUCTS
PART# TC20NGE
MATERIAL: EPDM
PATENTS:
WWW.SALCOPRODUCTS.COM/LEGAL

SECTION A-A
SCALE 3 : 1

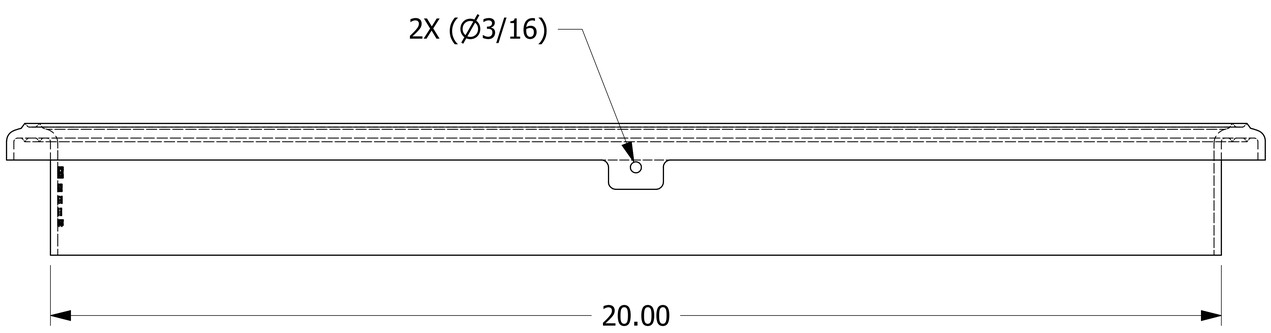

REV	BY	DATE	REF #	PUB
W	BP	8/11/22	202208111451	BP

UNLESS OTHERWISE SPECIFIED DIMENSIONAL TOLERANCES
FRACTIONAL: ±1/16
X.XX: ±.03
X.XXX: ±.015
ANGULAR: ±1°
DEBURR ALL SHARP EDGES. ALL MACHINED SURFACES TO HAVE A 125 RMS FINISH UNLESS NOTED OTHERWISE.
THIRD ANGLE PROJECTION

DRAWN BY:	CLH
CHECKED BY:	AVD
PROTOTYPE DATE:	2/13/1995
APPROVED FOR PRODUCTION BY:	CLH
PRODUCTION DATE:	1/15/1997
SIZE:	E
DRAWING #:	24456

SALCO PRODUCTS, INC.

PART NAME: NOZZLE GASKET 20"

MATERIAL: BLACK EPDM RUBBER DURO 80±5 SHORE A

PROJECT #: 961102 | SHEET #: 1 OF 1 | SCALE: 1:1

PART #: TC20NGE

THIS PRINT, PROPERTY OF SALCO PRODUCTS INC, CONTAINS PROPRIETARY INFORMATION AND MUST NOT BE COPIED, REPRODUCED, OR USED DETRIMENTALLY TO OUR INTEREST.